Linen Towers, Base Towers and Tall Base Overlay Collections

Ashford, Bedford, Gentry, Lambiere, Quenton, Revere and Valencia
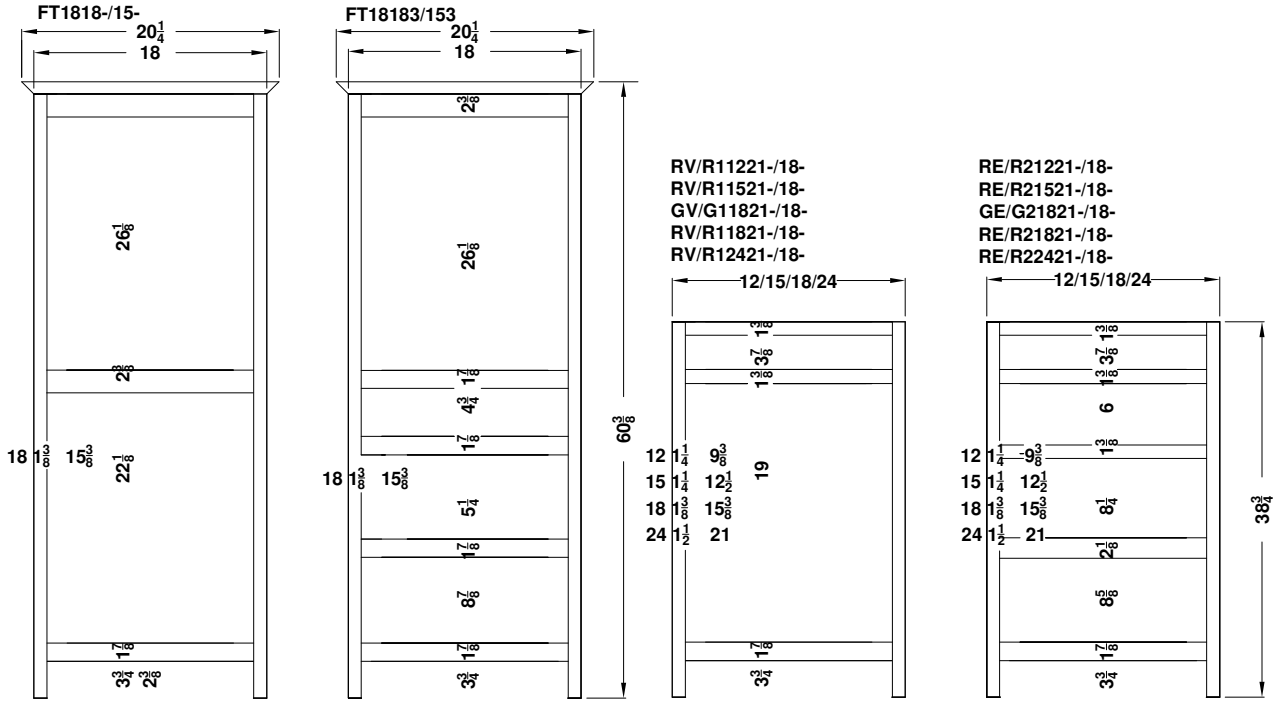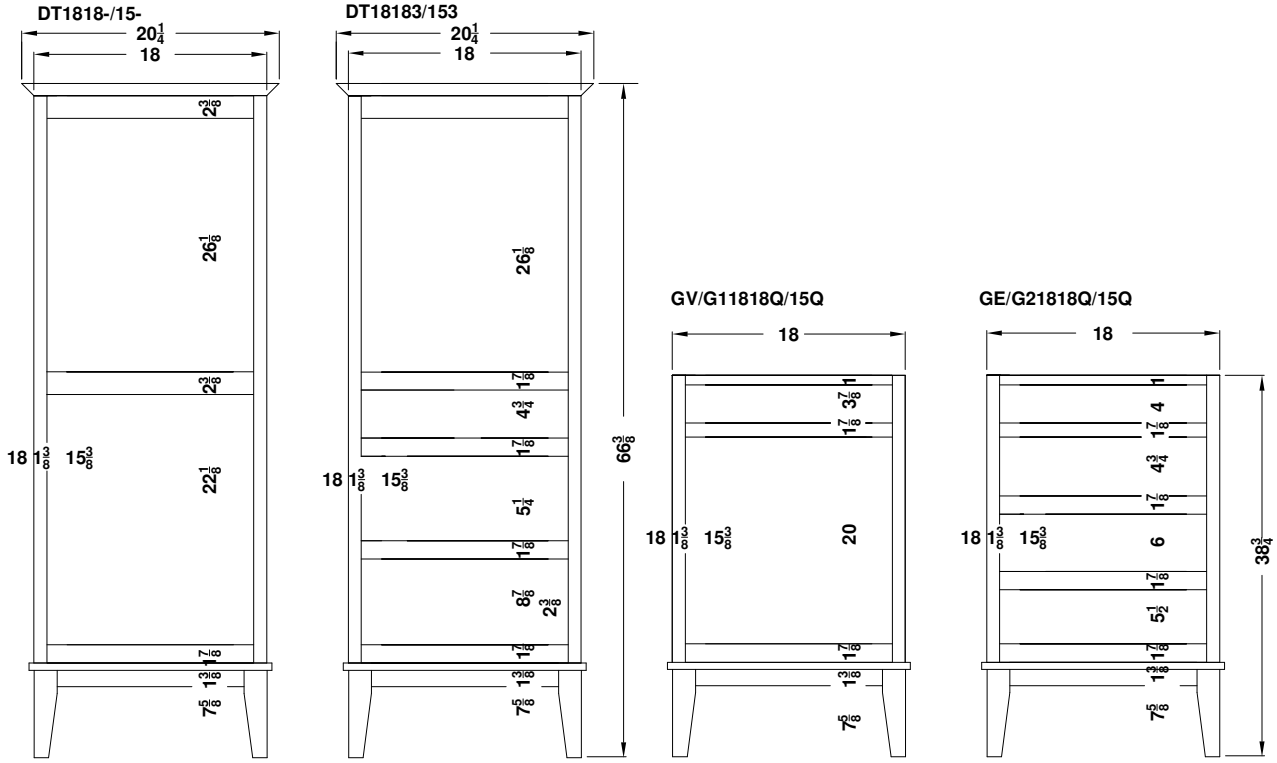
All Dimensions are shown in inches rounded up or down to the nearest 1/8". The sill adds 1" to the width of the cabinet.